AL 2022 Nora Stainless Steel Boat and Yacht Reading Light

316L stainless · 2.2W / 220 lm · 9-31V DC · IP65

PRODUCT IMAGE

TECHNICAL DRAWING

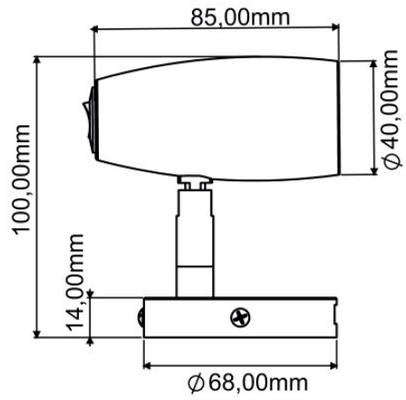

IP65	Class III	316L stainless	12–24V
PROTECTION	ELECTRICAL CLASS	MATERIAL	VOLTAGE
UV resistant	**CE**	**Made in Türkiye**	**2 years**
DURABILITY	CONFORMITY	ORIGIN	WARRANTY

TECHNICAL DATA

ELECTRICAL	
Power	2.2W
Voltage	9-31V DC (suitable for 12V and 24V systems)
OPTICAL	
LED	3 Power LEDs
LED Colours	White (6000K), Warm White (3000K), Neutral White (4000K)
Luminous Flux	220 lm
MECHANICAL	
Body	AISI 316L stainless steel, resistant to corrosion and impact; swivel head
Dimensions	Head length 85 mm head Ø40 mm overall height 100 mm base Ø68 x 14 mm

MECHANICAL (continued)	
Protection Rating	IP65 Class III
INSTALLATION AND USE	
Mounting	Screw-fixed surface mounting (Ø68 mm base)
Application	Yachts, boats, caravans, bedsides and reading corners; indoor and outdoor
GENERAL	
Product Code	AL 2022 (NORA)
Operation	On/off from the main supply line; touch-control (TC) and USB-charging (5V 3A) models are also available
Carton	1 pc (16 x 15 x 8 cm)
Warranty	2 years

OPTIONS AND LUMINOUS FLUX

LED Colour \ Power	2,2W
White (6000K)	✓
Warm White (3000K)	✓
Neutral White (4000K)	✓
Voltage	9-31V

Values: total luminous flux (lm). ✓ option available, – not available.

PRODUCT FEATURES

- AISI 316L stainless steel — resistant to corrosion and impact
- Wide 9-31V DC input range (12V and 24V systems)
- 2.2W / 220 lumens, balanced eye-friendly light
- Swivel head to aim the light where it is needed
- Low energy consumption, long LED life
- For yachts, caravans, bedsides and reading corners

Installation and Usage Warnings

– Operates on 9-31V DC only; do not connect directly to the 220V mains.